1： 10

Fashion Week
22
TOPO1
Fashion Week 2025

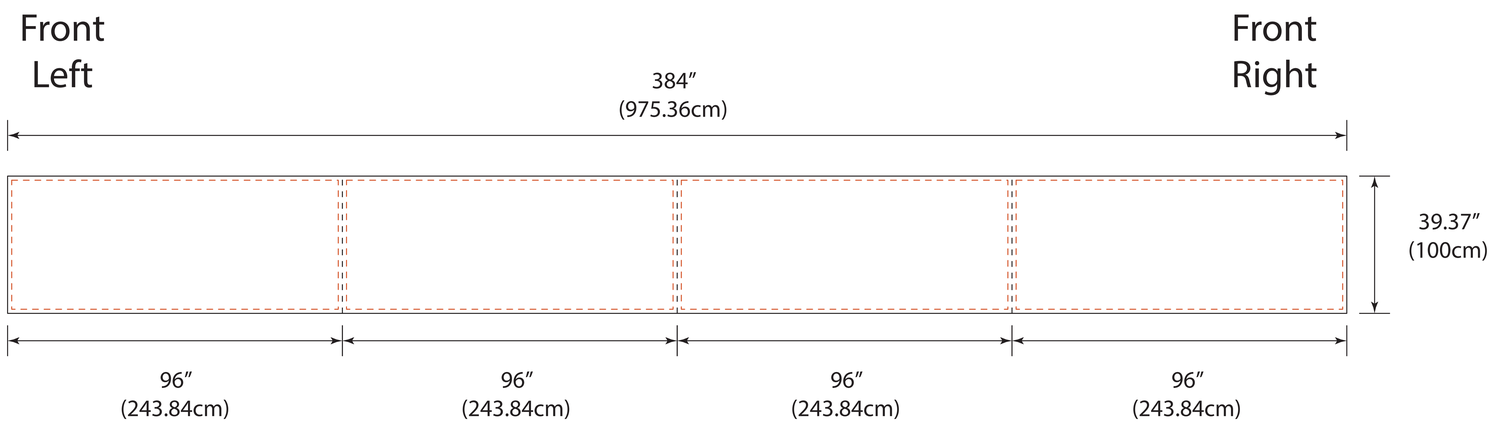
Front Left
Front Right
384″
(975.36cm)
39.37″
(100cm)
96″
(243.84cm)
96″
(243.84cm)
96″
(243.84cm)
96″
(243.84cm)

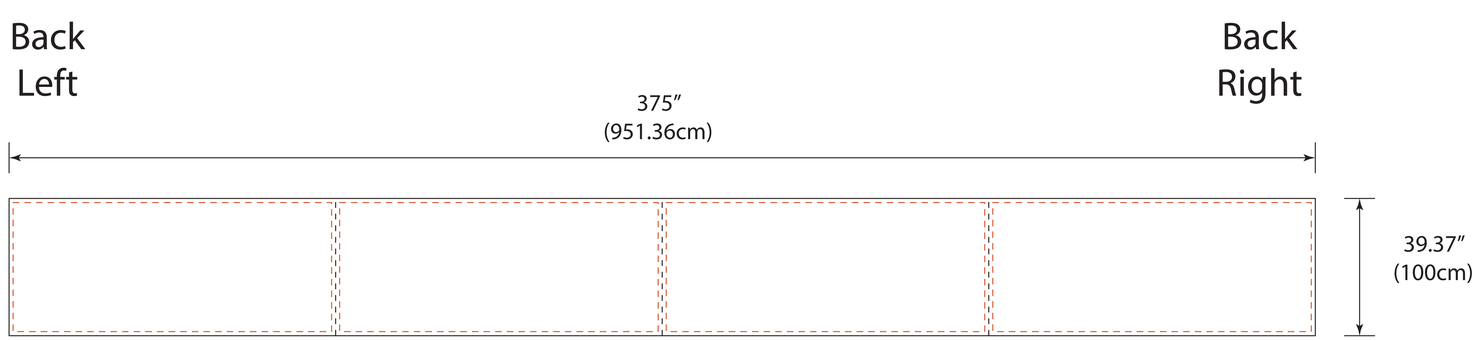
Back Left
Back Right
375″
(951.36cm)
39.37″
(100cm)

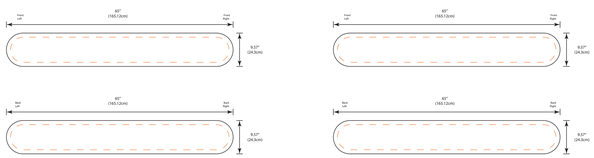
Front Left
Front Right
60″
(165.12cm)
9.37″
(24.3cm)
Back Left
Back Right
60″
(165.12cm)
9.37″
(24.3cm)

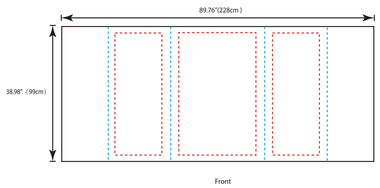
89.76″(228cm)
38.98″（99cm）
Front

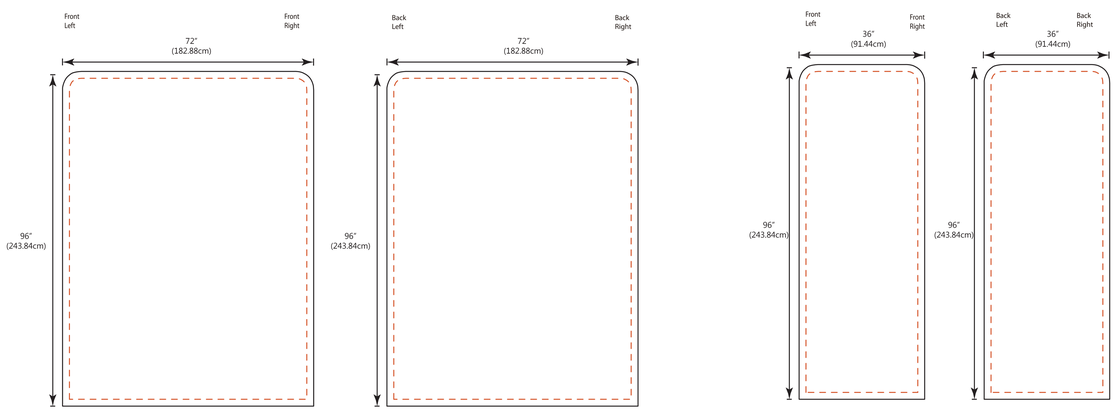
Front Left
Front Right
72″
(182.88cm)
96″
(243.84cm)
Back Left
Back Right
72″
(182.88cm)
96″
(243.84cm)
Front Left
Front Right
36″
(91.44cm)
96″
(243.84cm)
Back Left
Back Right
36″
(91.44cm)
96″
(243.84cm)

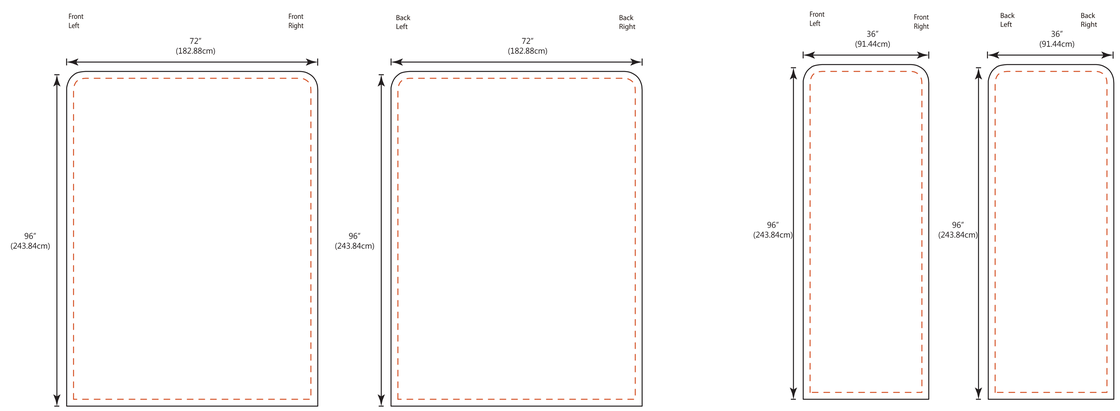
Front Left
Front Right
72″
(182.88cm)
96″
(243.84cm)
Back Left
Back Right
72″
(182.88cm)
96″
(243.84cm)
Front Left
Front Right
36″
(91.44cm)
96″
(243.84cm)
Back Left
Back Right
36″
(91.44cm)
96″
(243.84cm)